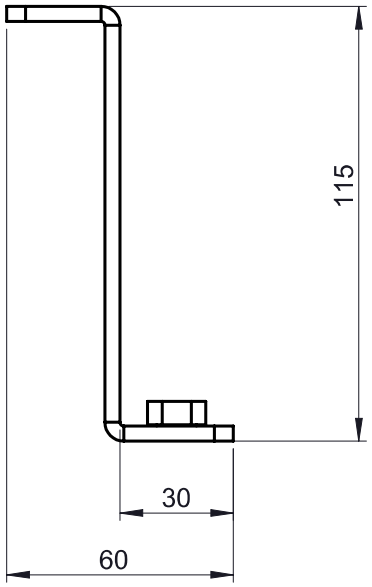

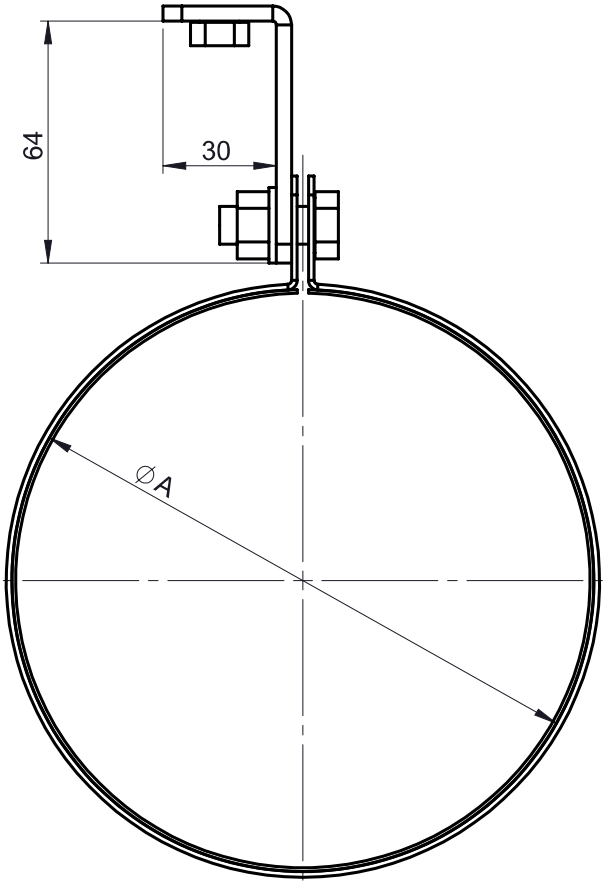

M1:6 (∅150)

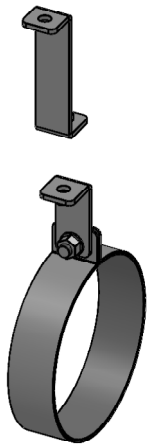

∅	060	080	100	110	115	125	130	150	160	180	200	225	230	250	300	350	400	450	500	550	560	600	650
A	60	80	100	110	115	125	130	150	160	180	200	225	230	250	300	350	400	450	500	550	560	600	650
kg	0,4	0,4	0,5	0,5	0,5	0,5	0,5	0,6	0,6	0,6	0,6	0,7	0,7	0,7	0,8	0,8	0,9	1	1,1	1,2	1,2	1,2	1,3

notes:

DIN ISO 13920 Tolerances B

revisions-no. 02

	date	name
drawn by	10.06.22	MSZ
checked by	10.06.22	SWA
approved by	10.06.22	JWY
modified by	25.09.23	USC

jeremias® CHIMNEY SYSTEMS

description: Deckenabhängung für Gewindestangen M8 mit Schalldämmeinlage

code: **VL 16**

drawing-no.: **03-51-0353-000**

scale: 1:2

format: A4

sheet: 1 of 1

© jeremias GmbH. All rights reserved, also regarding any disposal, exploitation, editing, distribution, as well as in the event of applications for industrial property rights.