TABLE OF CORRECTIONS (LAST FIVE)					
REVISION	CORRECTION	WZT NO	DESCRIPTION	DATE	NAME
01	A	116/2018	Zmiana wykonania elementu mocującego. Nadanie kodu dla elementu mocującego.	19.12.18	JAD

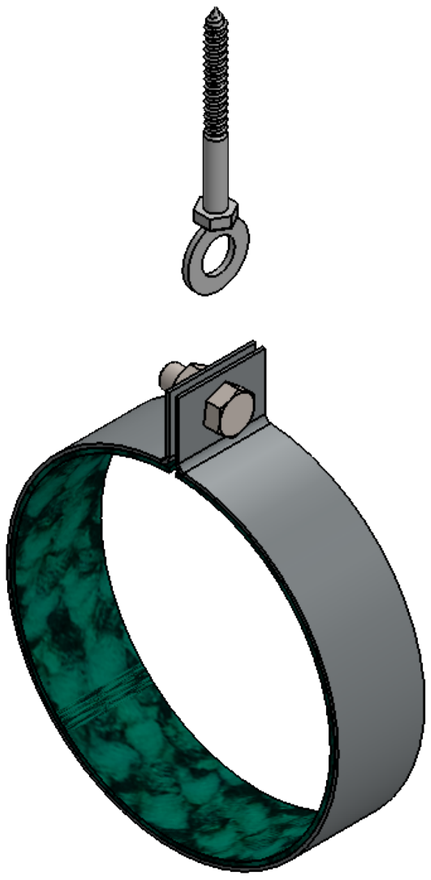

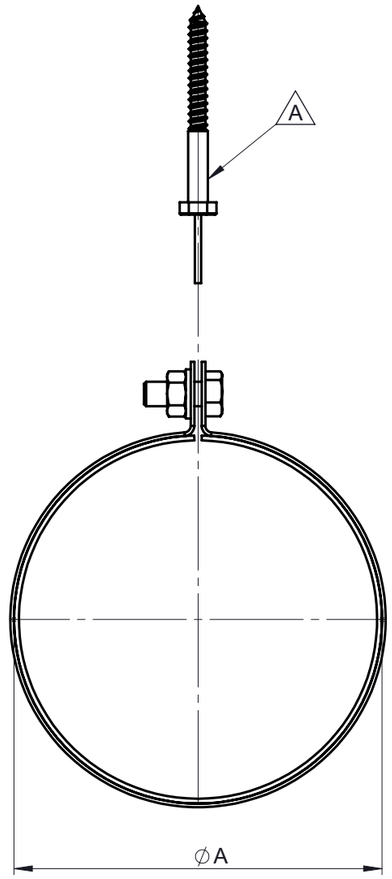

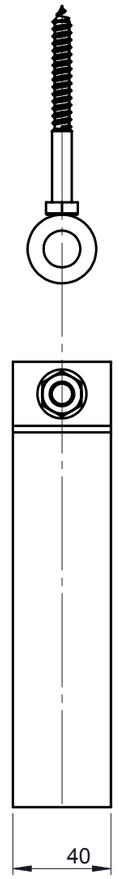

∅	080	100	120	130	150	160	180	200	225	250	300	350	400	450	500	550	600
A	80	100	120	130	150	160	180	200	225	250	300	350	400	450	500	550	600

notes:
PLCD

DIN ISO 13920 Tolerances B

revisions-no. A | mm/kg

	date	name
drawn by	18.12.2018	JAD
checked by	18.12.2018	SWA
approved by	18.12.2018	JWY
modified by		

jeremias CHIMNEY SYSTEMS

description: Obejma do podwieszenia

code: **VL12**

drawing-no.: **01-20-0351-000**

scale

format: A3

sheet: 1 of 1