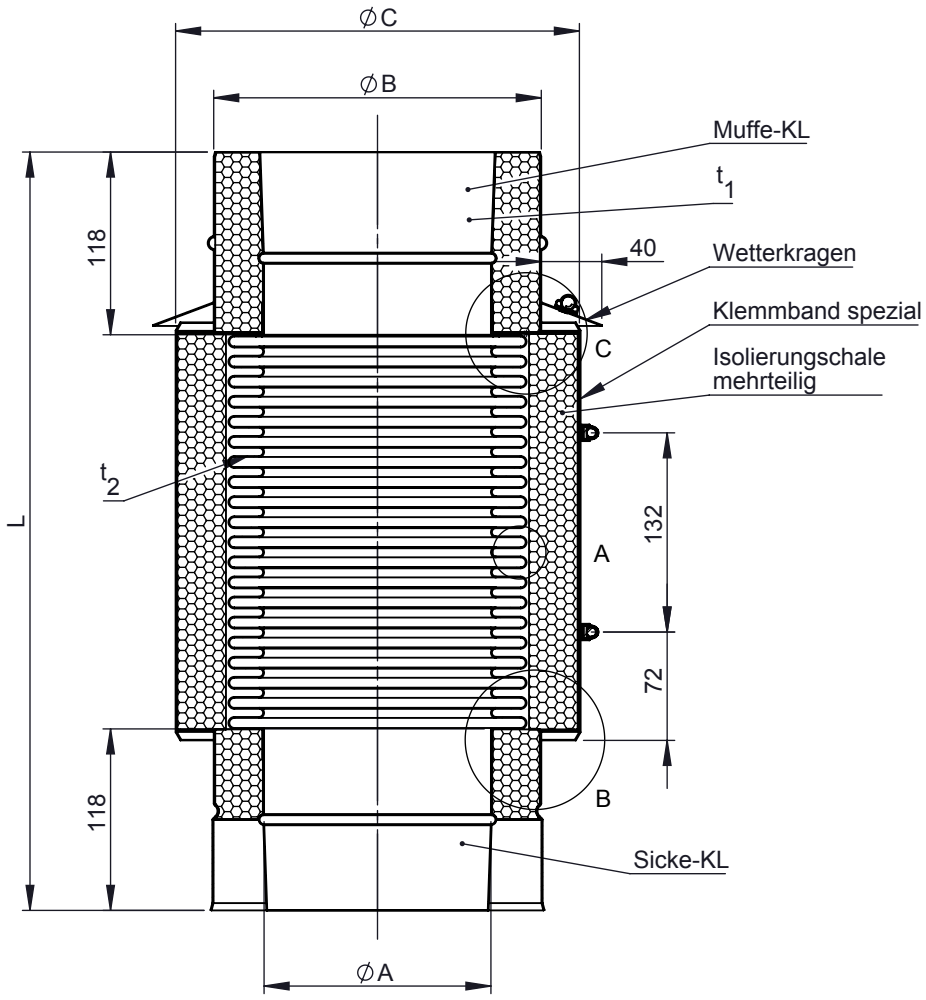


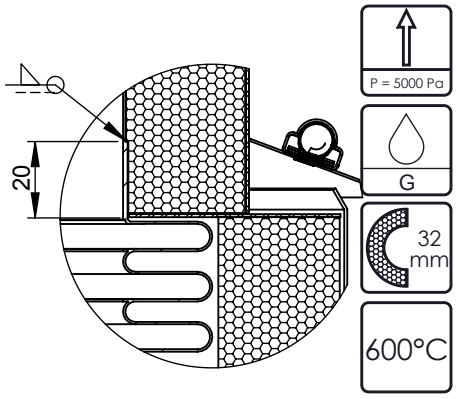


C (1 : 2)

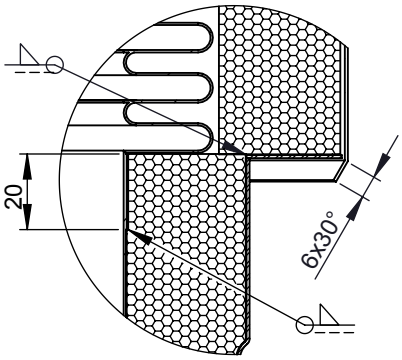


B (1 : 2)

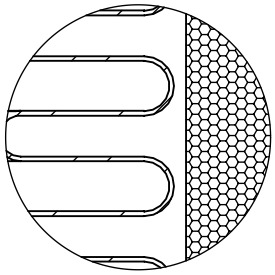

A (1 : 1)

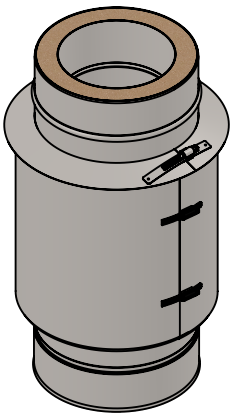

1:10

| Ø | 80 | 100 | 120 | 130 | 150 | 180 | 200 | 250 | 300 | 350 | 400 | 450 | 500 | 550 | 600 |
|---|---|---|---|---|---|---|---|---|---|---|---|---|---|---|---|
| A | 80 | 100 | 120 | 130 | 150 | 180 | 200 | 250 | 300 | 350 | 400 | 450 | 500 | 550 | 600 |
| B | 145 | 165 | 185 | 195 | 215 | 245 | 265 | 315 | 365 | 415 | 465 | 515 | 565 | 615 | 665 |
| C | 175 | 195 | 215 | 245 | 265 | 295 | 315 | 365 | 415 | 465 | 515 | 515 | 625 | 515 | 735 |
| L | 500 | 500 | 500 | 500 | 500 | 500 | 500 | 520 | 555 | 580 | 530 | 535 | 535 | 535 | 535 |
| t1 | 0,6 | | | | | | | | | | | | | | |
| t2 | 0,6 | | | | | | | | | | | | | | |
| kg | 4,20 | 5,06 | 5,61 | 6,37 | 8,03 | 9,08 | 9,86 | 13,21 | 16,10 | 18,64 | 21,61 | 24,11 | 26,52 | 28,93 | 31,34 |
| max. Dehnungaufnahme | 90 | | | | | | | | | | | | | | |

material: inside/outside 1.4404/1.4301 (316L/304)

surface: inside/outside 2B/2R (3C/3D)

mm/kg

revisions-no. A7

| | | | | | date | name |
|---|---|---|---|---|---|---|
| | A7 | 17.08.2016 | RLE | drawn | 21.01.11 | KHA |
| | A6 | 06.08.15 | OSP | checked | 06.08.15 | SRU |
| | A5 | 27.07.15 | OSP | checked | 06.08.15 | MNI |
| | A4 | 26.01.12 | FST | checked | | |
| | A3 | 22.12.11 | UFE | appr. | | |
| | revision | date | name | | | |

jeremias® CHIMNEY SYSTEMS

description Kompensator für DW-KL

code **DW-KL 511**

drawing-no. **02-10-9200-000**

Scale 1:5

Format A4

Sheet 1

All rights reserved!