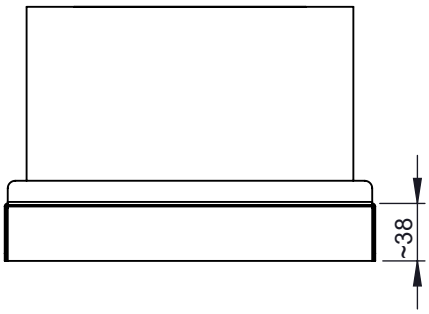

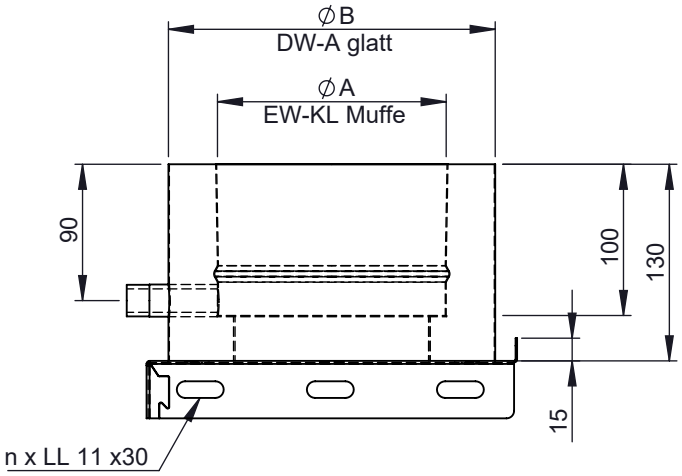

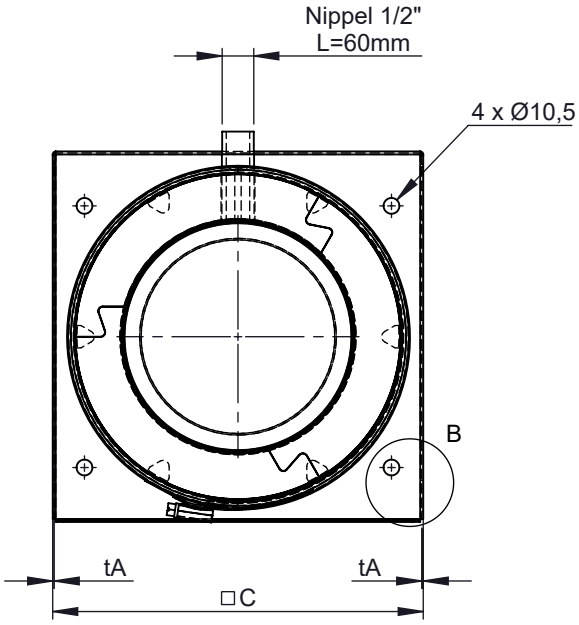

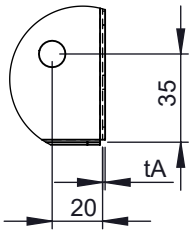

DETAIL B (1 : 3)

M 1:8 (Ø150)

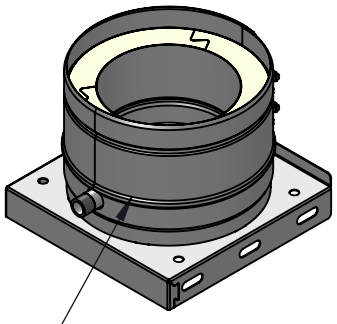

Ø	80	100	110	115	120	130	150	160	180	200	225	250	300	350	400	450	500	550	600
A	80	100	110	115	120	130	150	160	180	200	225	250	300	350	400	450	500	550	600
B	145	165	175	180	185	195	215	225	245	265	290	315	365	415	465	515	565	615	665
C	215					225	245	255	275	295	320	345	395	445	495	545	595	645	695
n	3													5					
t_i/t_a	0,6/0,6																		
tA	1										1,5			2					
kg	1,6	1,7	1,8	1,9	1,9	2	2,3	2,5	2,8	3,1	4	4,5	5,6	7,7	9,2	10,8	12,6	14,4	16,4

notes:

DIN ISO 13920 Tolerances B

revisions-no. A1 | mm / kg

	date	name
drawn by	31.10.2019	RLE
checked by		
approved by		
modified by		

jeremias® CHIMNEY SYSTEMS

description: Grundplatte mit Kondensatablauf seitlich mit Ablauf Nippel 1/2" l=60mm

code: **DWKL06**

drawing-no.: **02-10-1088-000**

scale: 1:5

format: A4

sheet: 1 of 1

© jeremias GmbH. All rights reserved, also regarding any disposal, exploitation, editing, distribution, as well as in the event of applications for industrial property rights.