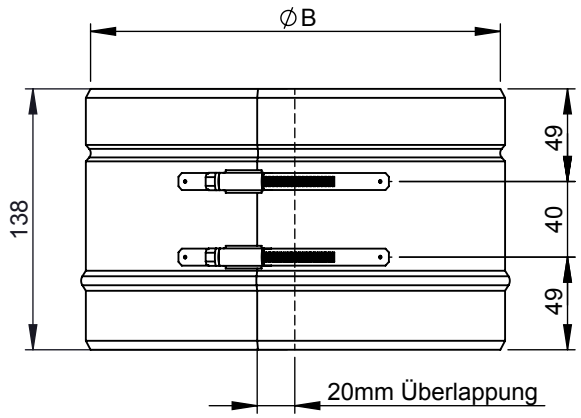

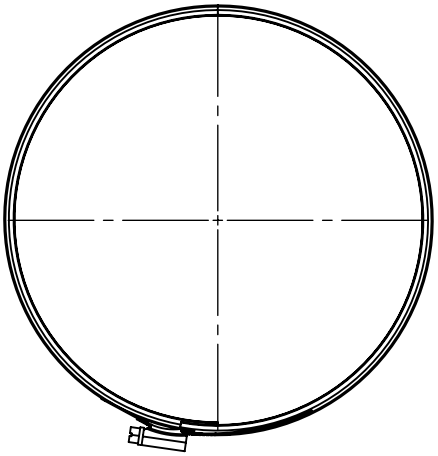

M 1:6 (Ø215)

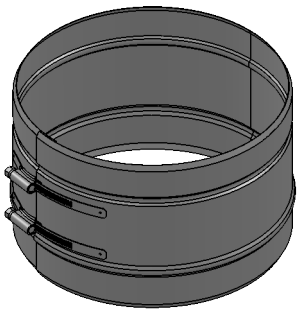

Ø	95	110	115	125	130	145	150	160	165	170	175	180	185	190	195	200	205	210
B	95	110	115	125	130	145	150	160	165	170	175	180	185	190	195	200	205	210
kg	0,19	0,21	0,22	0,24	0,24	0,26	0,27	0,28	0,29	0,3	0,31	0,31	0,32	0,33	0,33	0,34	0,35	0,36

Ø	215	220	225	230	235	240	245	250	255	260	265	275	280	285	290	295	300	315
B	215	220	225	230	235	240	245	250	255	260	265	275	280	285	290	295	300	315
kg	0,36	0,37	0,38	0,38	0,39	0,4	0,4	0,41	0,42	0,43	0,43	0,45	0,46	0,46	0,47	0,48	0,48	0,5

notes:

DIN ISO 13920 Tolerances B

revisions-no. A2 | mm / kg

	date	name
drawn by	01.10.2018	KAB
checked by		
approved by		
modified by	11.10.2018	KAB

jeremias® CHIMNEY SYSTEMS

description: Klemmband

code: **ZUAC41**

drawing-no.: **01-07-06-9005-000**

scale: 1:4

format: A4

sheet: 1 of 2

© jeremias GmbH. All rights reserved, also regarding any disposal, exploitation, editing, distribution, as well as in the event of applications for industrial property rights.

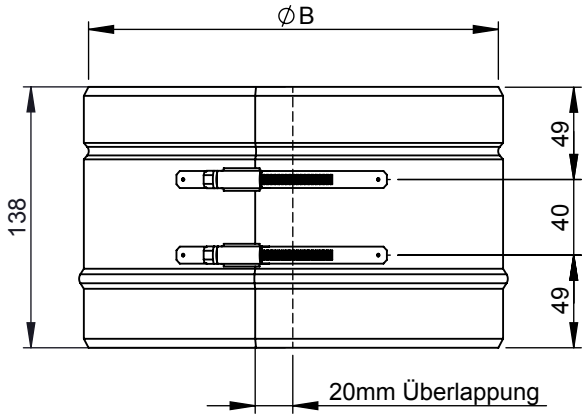

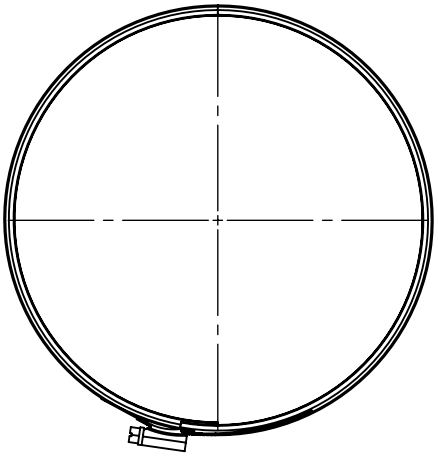

M 1:6 (Ø325)

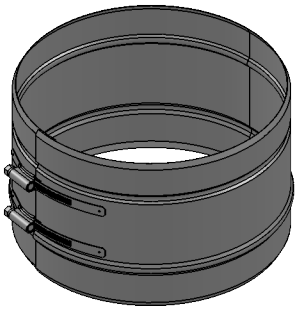

Ø	325	340	345	350	365	400	415	450	465	500	515	550	565	600	615	650	665	700
B	325	340	345	350	365	400	415	450	465	500	515	550	565	600	615	650	665	700
kg	0,52	0,54	0,55	0,55	0,57	0,62	0,64	0,69	0,71	0,76	0,79	0,83	0,86	0,91	0,93	0,98	1,0	1,05

Ø	715	750	765	800	815	850	865	900	915	950	965	1000	1015	1050	1065	1100	1115	1150	1165	1200
B	715	750	765	800	815	850	865	900	915	950	965	1000	1015	1050	1065	1100	1115	1150	1165	1200
kg	1,07	1,12	1,14	1,19	1,21	1,26	1,28	1,33	1,35	1,4	1,42	1,47	1,49	1,54	1,56	1,61	1,63	1,68	1,7	1,75

notes:

DIN ISO 13920 Tolerances B

revisions-no. A2

mm / kg

	date	name
drawn by	01.10.2018	KAB
checked by		
approved by		
modified by	11.10.2018	KAB

jeremias® CHIMNEY SYSTEMS

description: Klemmband

code: **ZUAC41**

drawing-no.: **01-07-06-9005-000**

scale: 1:4

format: A4

sheet: 2 of 2

© jeremias GmbH. All rights reserved, also regarding any disposal, exploitation, editing, distribution, as well as in the event of applications for industrial property rights.